Electrolux

Gas Front Load Dryers

EWMGD70J RR/MB/TS/SS/IW

Wave-Touch® Electronic Controls Featuring Perfect Steam™

Turquoise Sky
EWMGD70J TS

Red Hot Red

Mediterranean Blue

Turquoise Sky

Silver Sands

Island White

Optional Luxury-Glide® Touch-2-Open™ Pedestals Shown in Available Colors.

Largest Capacity Dryer[1]

Dry the most in one load with 8.0 cu. ft. capacity.

Fastest Dry Time[2]

Fourteen minutes to dry.

Specialty Cycles

A cycle for virtually anything including pet beds, stuffed animals, workout gear and more.

Perfect Steam™ Dryer

The latest technology removes wrinkles and freshens clothes. "Add Steam" option can be used with select cycles.

27" GAS FRONT LOAD DRYERS	
Capacity IEC	8.0 Cu. Ft.
Features	
Signature Soft-Arc Door Design	Yes
Wave-Touch® Electronic Controls with LCD Display	Yes
Perfect Steam™ Dry System	Yes
Perfect Tumble™ Dry System	Yes
Luxury-Quiet™ Sound System	Yes
Luxury-Design® Lighting	Yes
Luxury-Dry™ System	Yes
Touch-2-Open™/(Close) Door	Yes
Exact Dry™ Moisture Sensor	Yes
Stainless Steel Dryer Drum	Yes
Tumble Speed (RPM)	50
Reversible Door	Yes
Adjustable Leveling Legs	Yes
NSF® Certified	Sanitize
Cycles	
Fast Dry, My Favorites (3), Heavy Duty*, Bulky/Bedding*, Mixed Load*, Towels, Normal*, Active Wear*, Casual*, Delicate*, Perfect Steam™,* Timed Dry (*Can be used with Add Steam option)	14
Specialty Cycles – Jeans, Warm Up, Stuffed Animals*, Pet Beds, Fast Steam, Comforter, Kids Wear, Air Clean, Wool (*Can be used with Add Steam option)	9
Individual Custom Options (3) – Additional user settings, each with 11 cycles, 9 Specialty and 3 My Favorites (23)	69
Total Cycles Available	92
Options	
Temperature Selections	7
Add Steam	9
Electronic Auto Dry System	Yes
Manual Timed Dry Selections	6
Delay Start (Hours)	22
End-of-Cycle Chime	Adjustable
Eco-Friendly	Yes
Anti-Static	Yes
Line Dry	Yes
Installation Options	
Freestanding, Under Counter*, Stacked (Above Washer), Pedestal, Hidden (In Closet), Second Floor, 4-Way Dryer Venting	Yes
Accessories	
Luxury-Glide® Touch-2-Open™/(Close) Pedestal – See Back for Part Numbers	Optional
Dryer Stacking Kit – PN# ESTACKIT	Optional
LP Gas Conversion Kit – PN# PCK4300	Optional
Mobile Home Installation Kit – PN# 137067200	Optional
Drying Rack – PN# 134912700	Included
Specifications	
Color –	
Red Hot Red	RR
Mediterranean Blue	MB
Turquoise Sky	TS
Silver Sands	SS
Island White	IW
Product Dimensions –	
Height (Without 15" Pedestal) (With 15" Pedestal)	38" 53"
Width	27"
Depth (to Center of Arc Including Door and Exhaust) (with 90° Door Open)	31-1/2" 50-5/8"
Gas/Power Supply Connection Location	Bottom Center Rear/ Bottom Right Rear
Voltage Rating	120V/60Hz/15A
Connected Load (kW Rating) @ 120 Volts‡	1.1
Amps @ 120 Volts	9
Heating Element (BTU/HR)	22,000
Shipping Weight (Approx.)	140 Lbs.

**Side-by-Side units in under-counter installation require custom-built countertop and/or cabinetry.*

‡For use on adequately wired 120V, dedicated circuit having 2-wire service with a separate ground wire. Appliance must be grounded for safe operation.

NOTE: Always consult local and national electric, gas & plumbing codes. Refer to Product Installation Guide for detailed installation instructions on the web at www.electroluxappliances.com.

Specifications subject to change.

NSF

[1]*Based on manufacturer specifications.*

[2]*Fastest time based on smallest load / Fast Wash and Fast Dry cycles selected for various load compositions.*

Electrolux

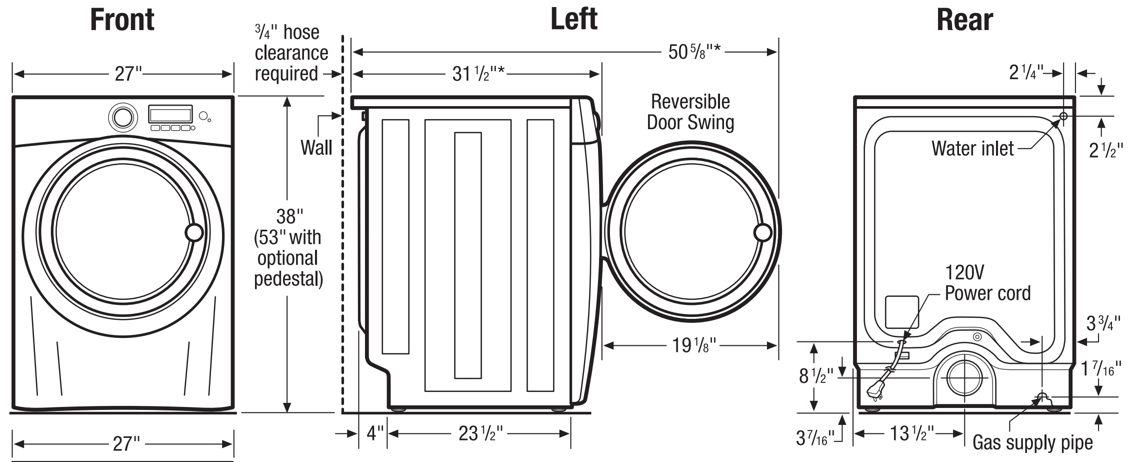

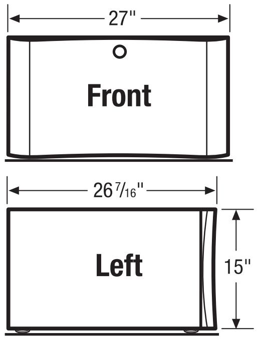

15" Drawer Pedestal Installation

Elevates dryer height to 53".
For detailed pedestal installation, refer to instructions included with pedestal or on web.
Note: Pedestal Installation requires modified utility hookup locations. For details, refer to Product Installation Guide on web.

Built-In Installations

For built-in installations, 3/4" steam hose clearance required at back of dryer, NO minimum clearance required around sides of units. For closet installation, allow 1" clearance between fronts of units and door. Location of plumbing, exhaust and utility hookups MUST be considered in built-in installations. For additional installation details, refer to Product Installation Guides on web.

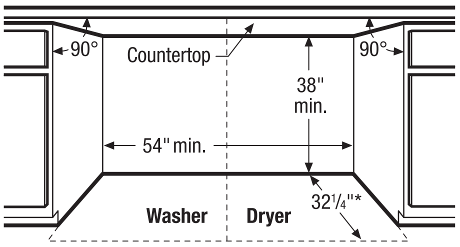

Side-by-Side Units in Under-Counter Installation
Requires custom-built countertop and/or cabinetry.

* To achieve minimal depth dimensions or clearances, dryer MUST be vented straight back or with quick-turn 90° elbow.

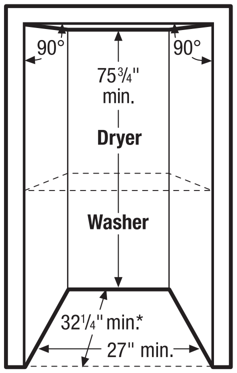

Stacked Units in Recessed or Closet Installation
For detailed stacked installation, refer to instructions included with Stacking Kit or on web. **Note:** Stacked installation requires modified utility hookup locations for dryer. For details, refer to Product Installation Guide on web.

Gas Dryer Specifications

- Product Weight – 130 Lbs.
- An electrical supply with grounded three-prong receptacle is required. The power supply circuit must be installed in accordance with current edition of National Electrical Code (ANSI/NFPA 70) and local codes & ordinances. *(Do not use same circuit as washer.)*
- Voltage Rating – 120V/60Hz/15 Amps
- Amps @120 Volts = 9 Amps
- Connected Load (kW Rating) @120 Volts = 1.1 kW
- Equipped with 120V 3-wire power supply cord, approx. 60" long.
- Always consult local and national electric, gas & plumbing codes.
- Can be installed alone, with or without optional 15" drawer pedestal, or stacked above matching Electrolux Washer, which requires installation of optional dryer stacking kit. *(For installation details, refer to instructions included with optional pedestal or stacking kit or on web.)*
- Can be built in with matching Electrolux Washer in under-counter, recessed or closet installation. Installations requiring countertop and/or cabinetry will require custom building. *(Refer to Built-In Installations on this page for cutout dimensions. For additional installation details, refer to Product Installation Guide on web.)*
- Closet installation requires vented door with 2 unobstructed louvered openings, minimum 60 sq. in. each, located 3" from top and bottom of door. Full-length 120 sq. in. opening also acceptable. Allow 1" clearance between door and fronts of units.
- Do NOT install in area exposed to dripping water or outdoor weather conditions, or where gasoline or other flammables, including automobiles, are kept or stored.
- Floor MUST be solid with 1" maximum slope. To ensure vibration or movement does not occur, reinforcement of floor may be necessary. Do NOT install on carpeted surface.
- Dryer MUST exhaust to outside of building, NOT into any concealed space.
- Dryer equipped for 4-way venting and approved for up to 125-foot-equivalent of duct length, determined by length of run and number of elbows needed.
- Exhaust installation requires minimum 4"-diameter rigid or flexible metal duct with approved vent hood having swing-out damper(s). Do NOT use flexible plastic or metal foil duct and use shortest run possible.
- Gas supply line should be 1/2" pipe and MUST have individual shutoff valve.
- Leveling legs supplied to level dryer properly and reduce excessive noise and vibration.
- Water inlet hose for steam setting connects to cold water supply with “Y” connector and requires 3/4" clearance between back of unit and wall.

Note: For planning purposes only. Refer to Product Installation Guide on the web at electroluxappliances.com for detailed instructions.

Optional Accessories

- Drawer Pedestals – Red Hot Red (PN# EPWD15RR), Mediterranean Blue (PN# EPWD15MB), Turquoise Sky (PN# EPWD15TS), Silver Sands (PN# EPWD15SS), Island White (PN# EPWD15IW).
- Dryer Stacking Kit – (PN# ESTACKIT).
- Mobile Home Installation Kit – (PN# 13706720 0).
- LP Gas Conversion Kit – (PN# PCK4300).

C US

Electrolux Major Appliances, N.A.

USA • 10200 David Taylor Drive • Charlotte, NC 28262 • 1-877-4electrolux (1-877-435-3287) • electroluxappliances.com
CANADA • 5855 Terry Fox Way • Mississauga, ON L5V 3E4 • 1-800-265-8352 • electroluxappliances.ca

High standards of quality at Electrolux Home Products, Inc. mean we are constantly working to improve our products. We reserve the right to change specifications or discontinue models without notice.

© 2011 Electrolux Home Products, Inc.
Printed in the U.S.A.